petgravity®

www.petgravity.store

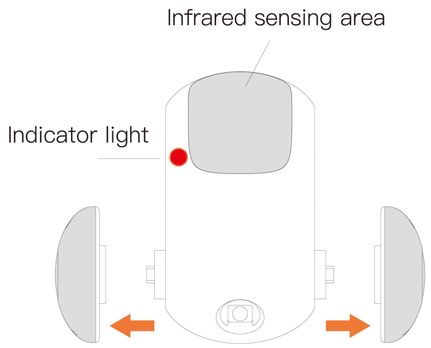

Removable wheel design for easy cleaning of stuck hair and other foreign matter.

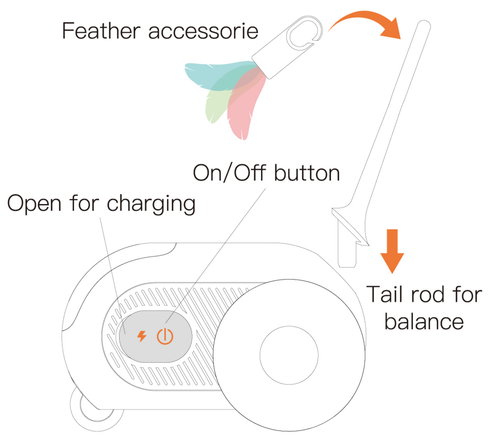

Replaceable accessories design, match your favorite accessories freely.

Warning: This product is a pet toy, contains small parts, not suitable for children aged 3 and under!

Tips for use:

Please replace feather accessories in time if they are damaged to prevent cats from swallowing them accidentally.

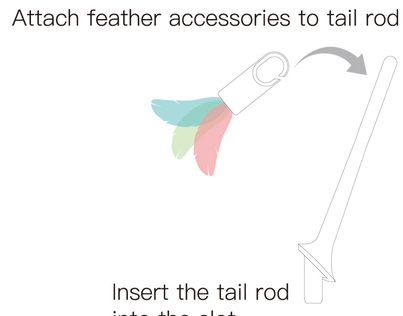

Tips for use:

The toy can flip up by itself with the help of the tail, please Insert the tail rod into the slot.

Please press the middle button to flip this toy up under remote control mode.

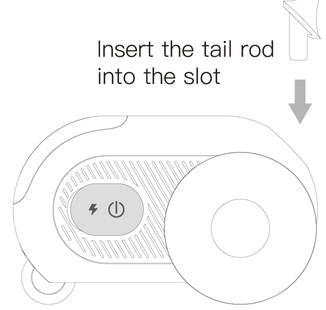

The toy can flip up by itself with the help of the tail.

This is a remote control user manual.
There are six buttons on the remote control.

6.The Mode button switches the product's working mode. In normal mode, pressing any of four arrow buttons shifts the product to remote control mode. Pressing the Mode button in remote control mode switches the product back to normal mode.

5.The speed button controls the product's moving speed, with two preset speeds. Upon normal activation, the product defaults to fast speed. Pressing the Speed button changes the indicator light to yellow, adjusting the product from high speed to low speed. Pressing the Speed button again changes the indicator light to green, returning the speed to high.

1.Press this button to move forward.

2.Press this button to move backward.

4.Press this button to move right side.

3.Press this button to move left side.

Tips for use:

If the wheels of the car are stuck by hair or some other fibers, please clean them in time.

Tips for use:

The sensors of car toy will be influenced by strong sunlight or incandescent lighting. Please use them indoors.

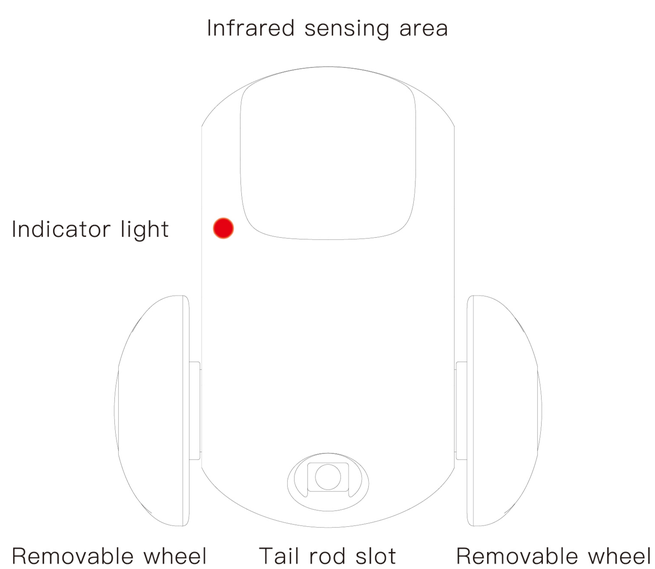

Main part

Use Instruction:

Short press the switch button: start/stop the smart car

Switch mode: in the startup state, long press the switch

1 Normal mode (steady green light for 3s), automatic shutdown after 5 minutes of operation.

2 Smart mode (steady blue light for 3s), automatically enter standby state after running for 5 minutes, reactivate by any touch.

Remote control mode: In startup state, press any direction buttons on the remote control.

Cancel remote control: In remote control mode, press the middle button of the remote control or there is no button operation within 30 seconds.

Indicator light:

Blinking red light: low battery, needs to be charged

Blinking blue light: charging

Steady green light: finished charging

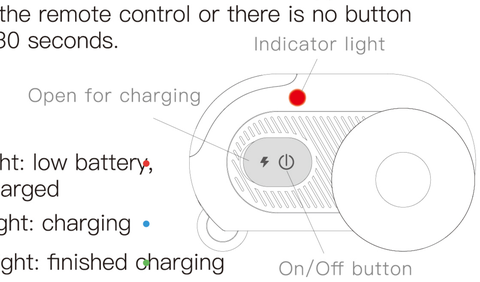

Please fully charge before using it for the first time.